Model:LCF07

Dimensions in “mm”

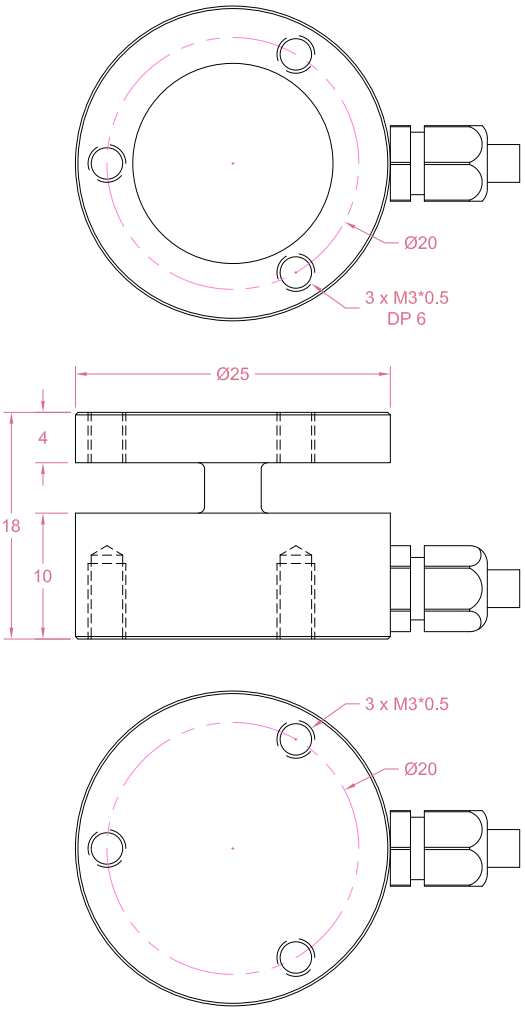



Order example:

2 x LCF07 - 50kg

Quantity Model Capacity

Email to sales@loadcellsensor.com for a quote

Specifications			
Rated Capacity	10/20/50/100/200/500 kg		
Rated Output	1.0 mV/V	Compensated Temp.	0...+40°C
Excitation	3~15V	Operating Temp.	-20...+60°C
Zero Balance	±0.05 mV/V	Temp. Coeff. of Zero	±0.02% F.S./°C
Nonlinearity	±0.5% F.S.	Temp. Coeff. of Span	±0.02% F.S./°C
Hysteresis	±0.5% F.S.	Input Resistance	380/750±100 Ohms
Nonrepeatability	±0.2% F.S.	Output Resistance	350/700±50 Ohms
Creep(5min)	±0.2% F.S.	Insulation Resistance	>2000M Ohms(50V)
Safe Load Limit	150% F.S.	IP Rating	IP65
Breaking Load	200% F.S.	Element Material	Stainless steel
Cable	Ø3*2000mm 4-conductor shielded cable		

• LCS reserves the right to modify its design and specifications without notice

LCS Tech Co., Limited
Custom is our daily standard
Email: sales@loadcellsensor.com

Load direction

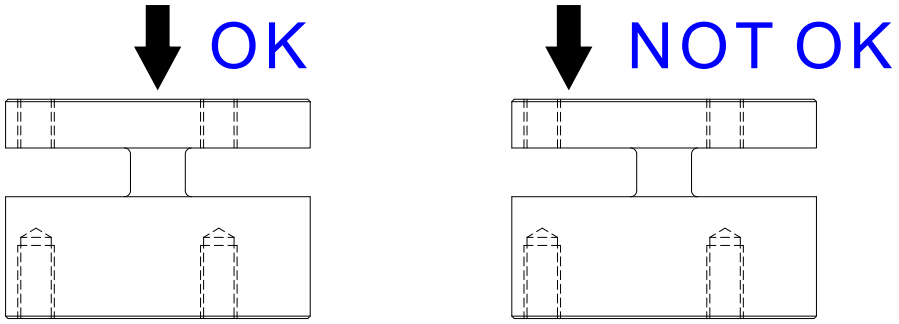

Sensor/Amplifier/Indicator

Items	Power supply	Output/Function
LCF07	3-15V (Constant)	0mV...+15mV (Depending on the power supply)
LCF07 + Analog amplifier	12~24V DC	0-3.3V,0-5V,0-10V, 0-20mA,4-20mA...
LCF07 + Digital amplifier	12~24V DC	RS485 or RS232 output
LCF07 + Indicator	12~24V DC	Display force value Switch/Relay output Peak holding RS485/RS232 interface 0-5V/0-10V/4-20mA output
Email us for datasheet of amplifier and indicator		

Customization options

Cable (Length/Specifications/Connectors)
Dimensions and measuring range
Working Temperature (-40°C...+180°C)
IP Rating (Up to IP68)

LCS Tech Co., Limited
Custom is our daily standard
Email: sales@loadcellsensor.com

Load | Force | Torque
www.loadcellsensor.com